德力西电气有限公司

Product Specification
产品规格书
Model: DHBFG12038HA2SL

Factory Address: Delixi High Tech Park,LiuShi Town,Yueqing City,

Zhejiang Province

工厂地址：浙江省乐清市柳市镇德力西高科技工业园

Tel: +086-400-826-8008

电话：+086-400-826-8008

Website：www.delixi-electric.com

网址：www.delixi-electric.com

SPECIFICATION 规格参数

1.外观尺寸 EXTERNAL DIMENSION	120*120*38
2.订货编码	DHBFG12038HA2SL
3.产品型号	G12038HA2SL
4.重量 WEIGHT	450g
5.轴承 BEARING	SLEEVE BEARING
6.额定电压 RATED VOLTAGE	AC 220V
7.额定电流 RATED CURRENT	0.13/0.12A±0.01MAXIMUM
8.额定功率 RATED INPUT POWER	20/18W±2MAXIMUM
9.转数 RATED SPEED	2600/3000 RPM±10%
10.最大风量 MAXIMUM AIR FLOW	91/113CFM
11.最大风压 MAXIMUM AIR PRESSURE	6.7/7.7mmH2O （AT ZERO AIR FLOW）
12.启动电压 STARTING VOLTAGE	AC 110V MINIMUM
13.存储温度 STORAGE HUMIDITY	-20℃~+80℃
14.运转温度 OPERATING TEMPERATURE	-25℃~+65℃
15.寿命 LIFE EXPECTANCE	30000HRS
16.噪音分贝 SOUND LEVEL	44dBA/46dBA

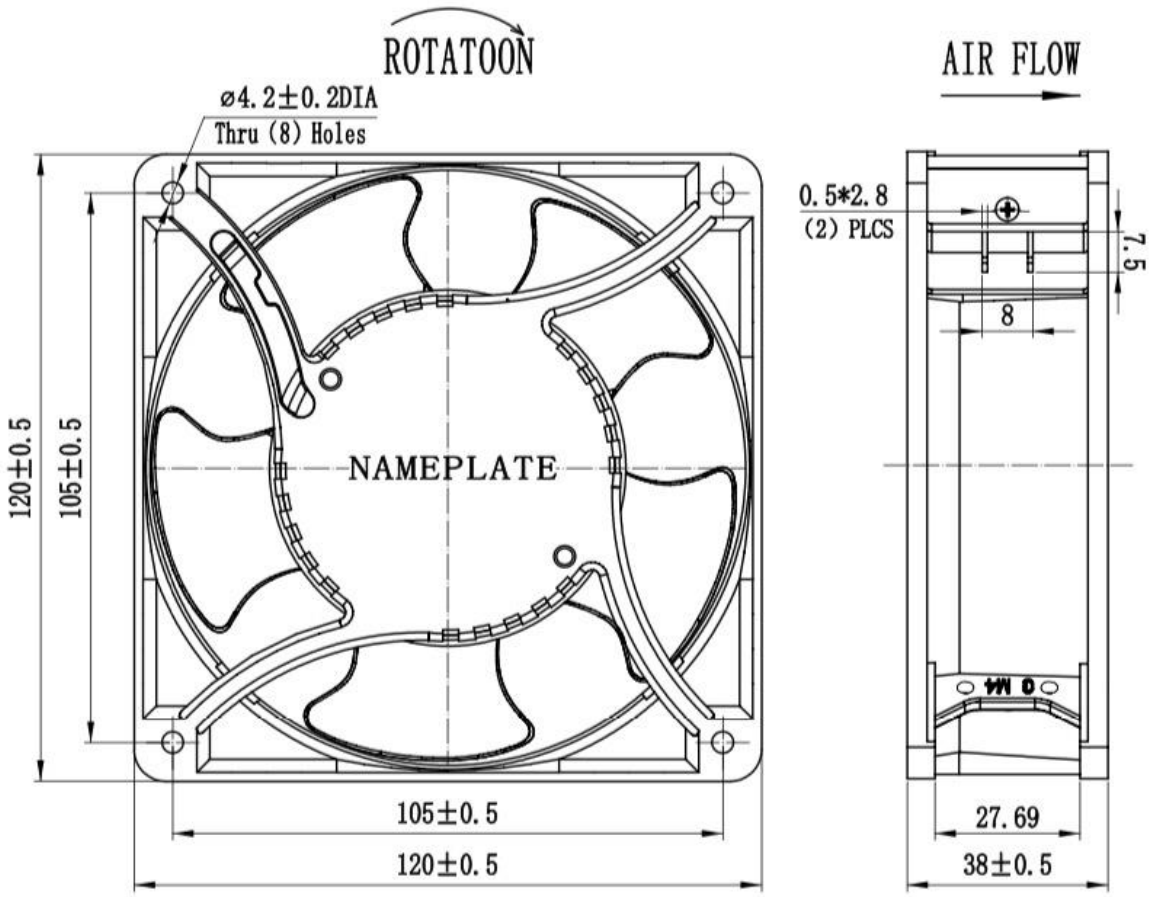
ROTATOON
AIR FLOW
ø4.2±0.2DIA
Thru (8) Holes
0.5*2.8
(2) PLCS
7.5
8
NAMEPLATE
120±0.5
105±0.5
105±0.5
120±0.5
27.69
38±0.5

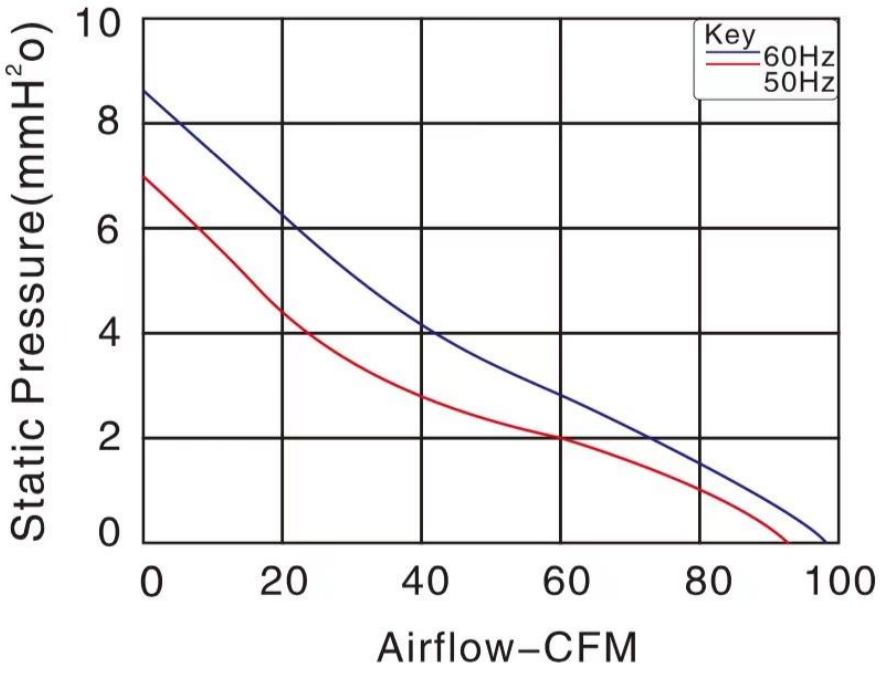
Static Pressure(mmH2o)
10
8
6
4
2
0
0
20
40
60
80
100
Airflow-CFM
Key
60Hz
50Hz